Art.Nr.: 901558 901559 901561

A

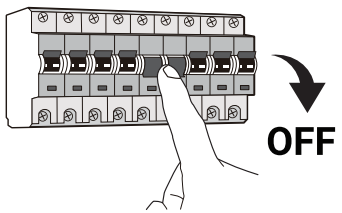

B1

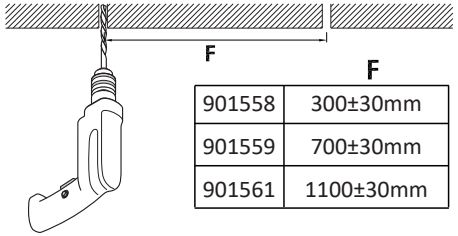

	F
901558	300±30mm
901559	700±30mm
901561	1100±30mm

B2

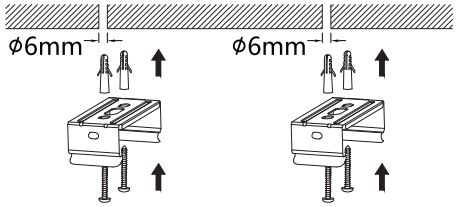

В комплекте

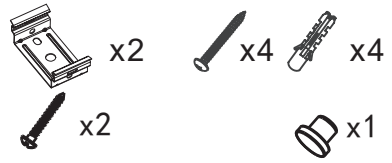

Нет в комплекте

	L	W	H	F
901558	630mm	67mm	72mm	300±30mm
901559	1120mm	67mm	72mm	700±30mm
901561	1520mm	67mm	72mm	1100±30mm

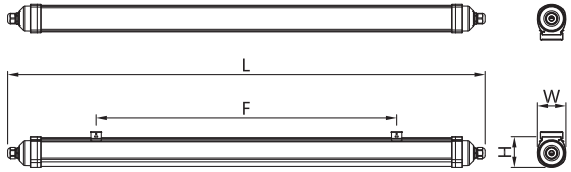

C

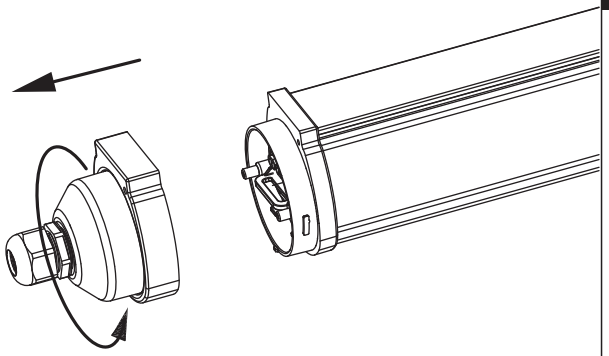

D

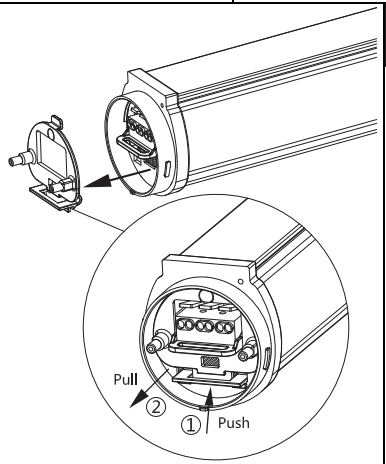

E

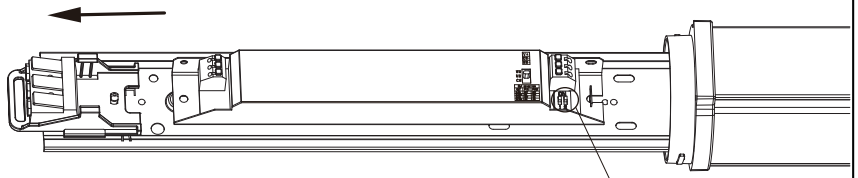

901558			
Power1	Power2	Power3	Power4
0. 125A	0. 15A	0. 175A	0. 20A
11W	14W	17W	20W
1900lm	2100lm	2600lm	2900lm

901559			
Power1	Power2	Power3	Power4
0. 20A	0. 25A	0. 30A	0. 35A
22W	28W	34W	40W
3300lm	4100lm	4600lm	5200lm

901561			
Power1	Power2	Power3	Power4
0. 20A	0. 25A	0. 30A	0. 35A
29W	36W	42W	50W
4500lm	5700lm	6400lm	7300lm

F

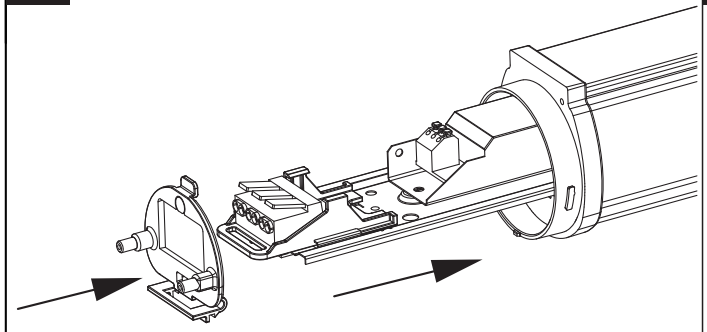

G

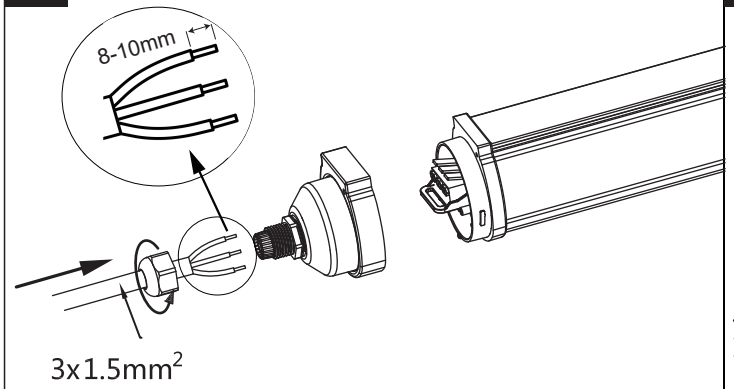

H

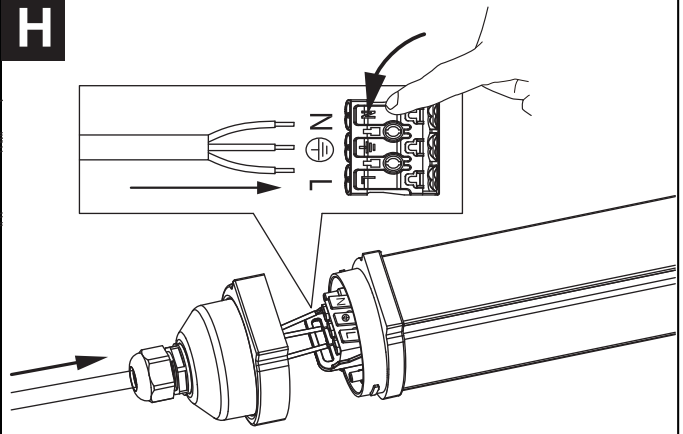

I

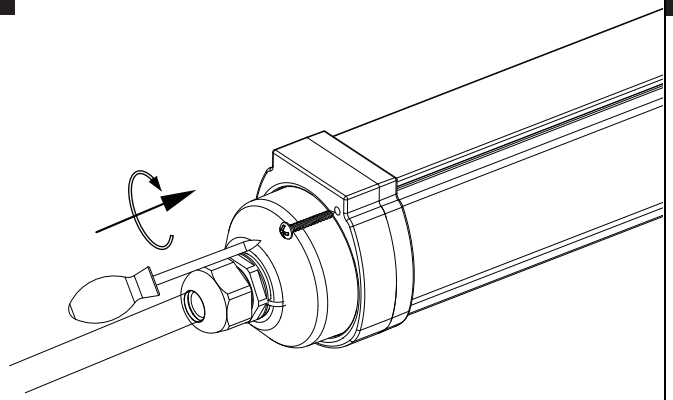

J

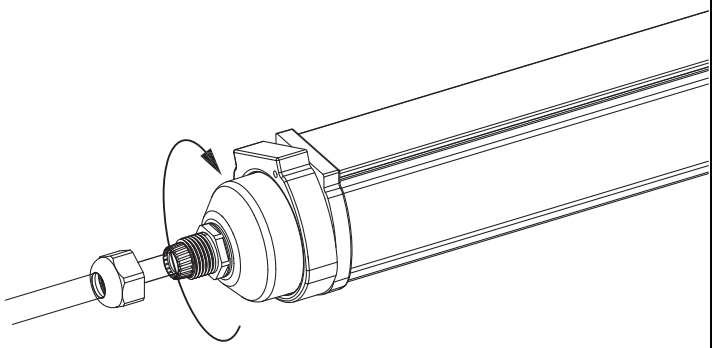

K

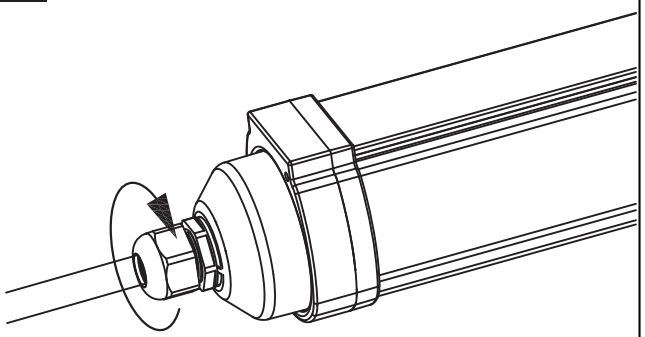

L1

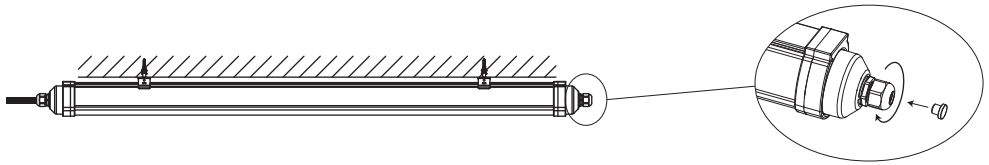

L2

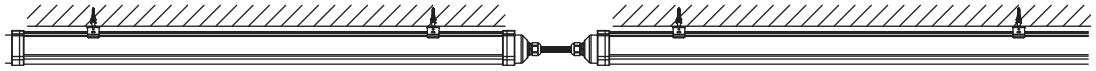

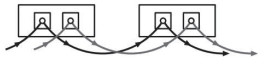

Max

	MAX		MAX
901558	24	901559	20
901561	18		
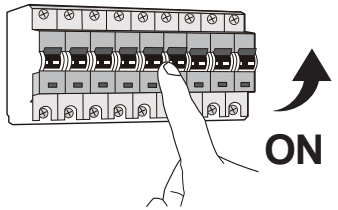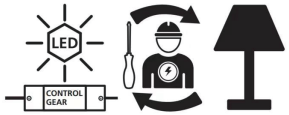
M