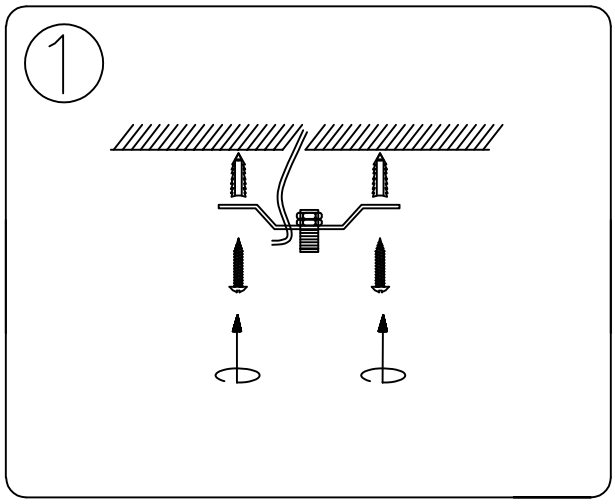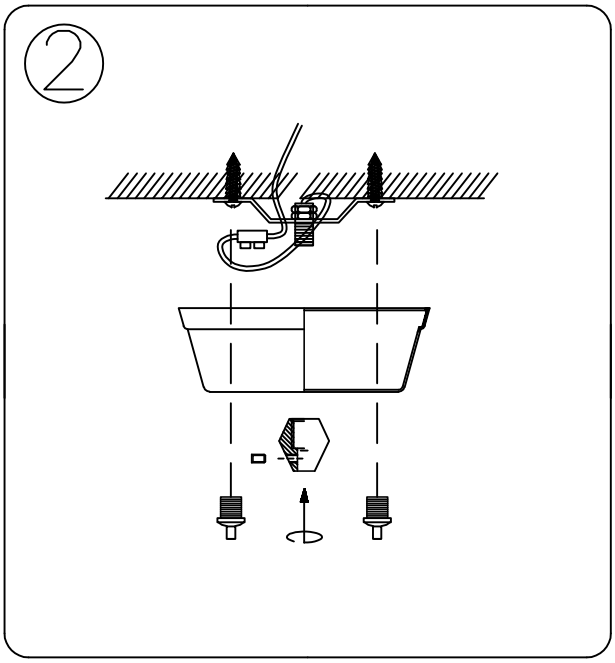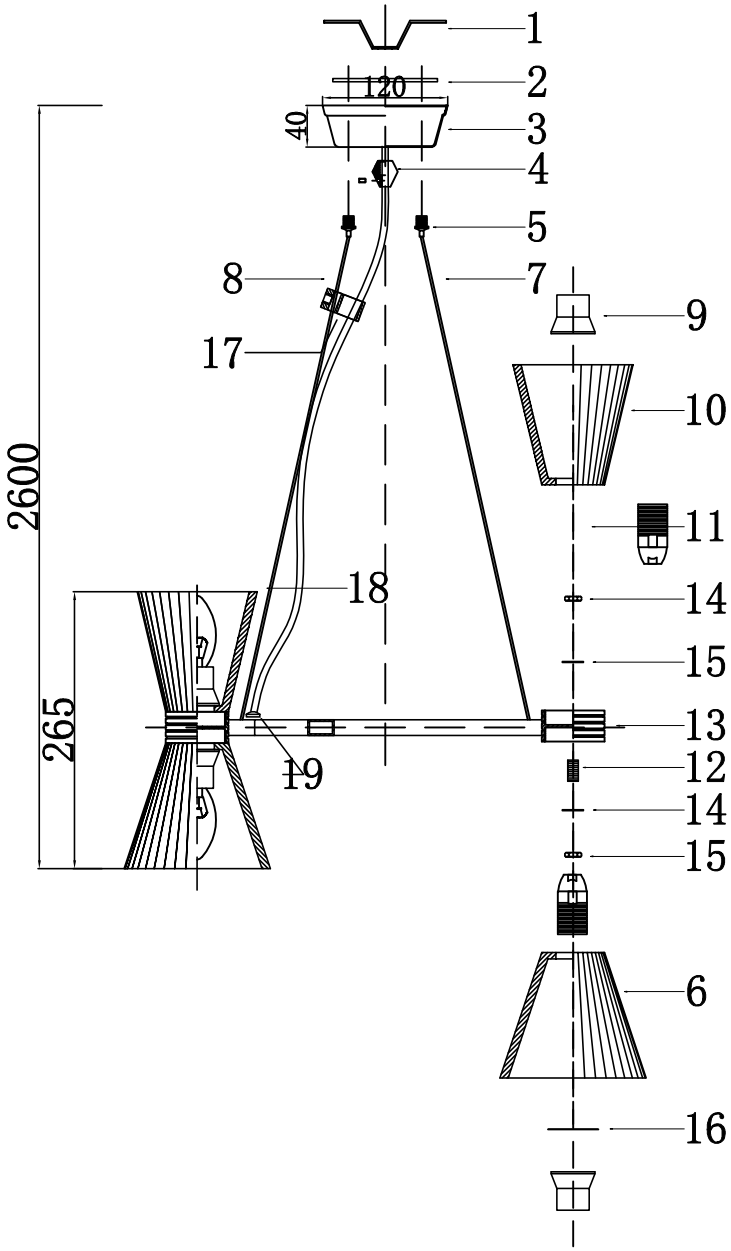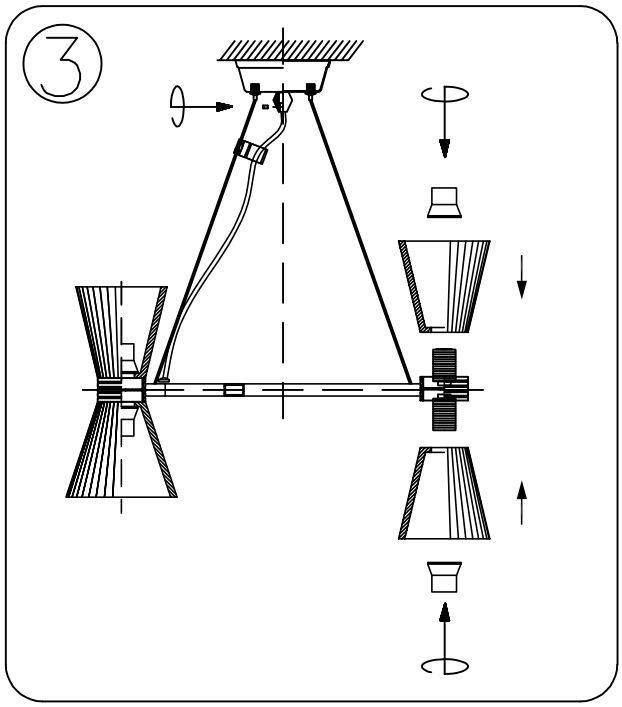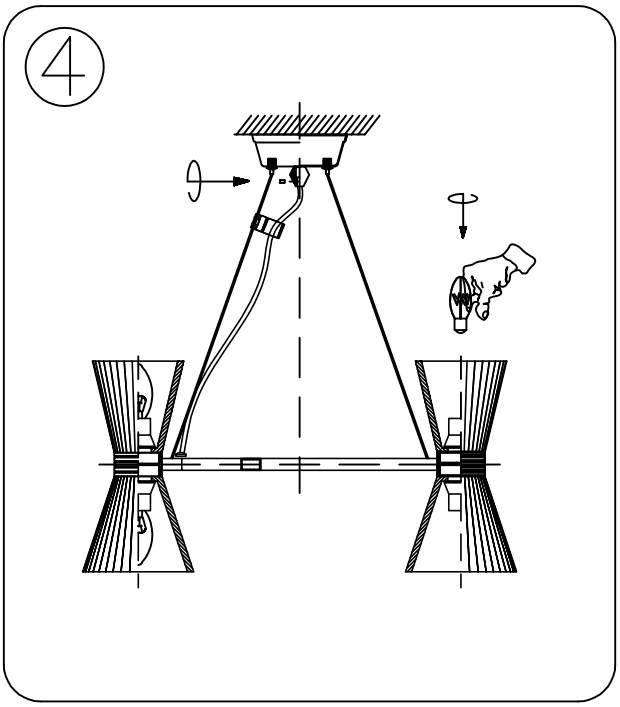3614/S