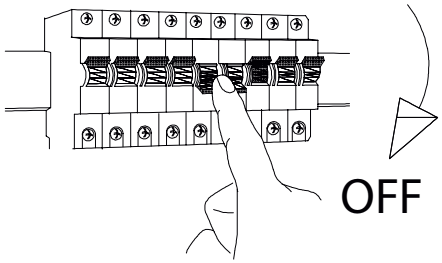

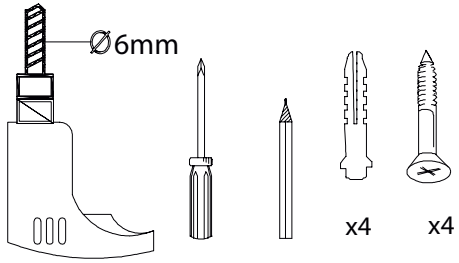

Nicht enthalten (Not included)

A

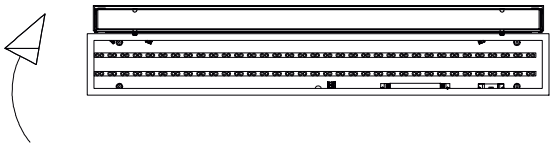

B

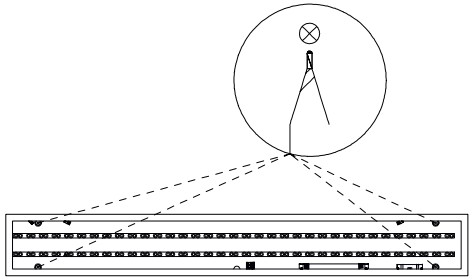

C

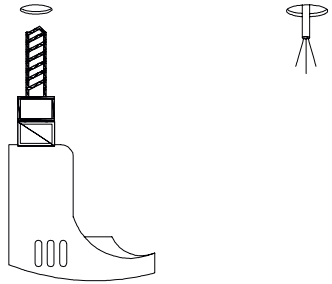

D

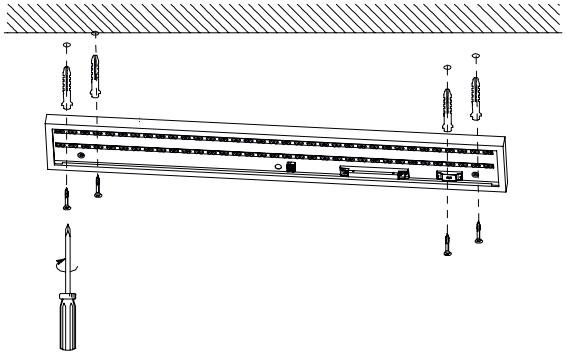

E

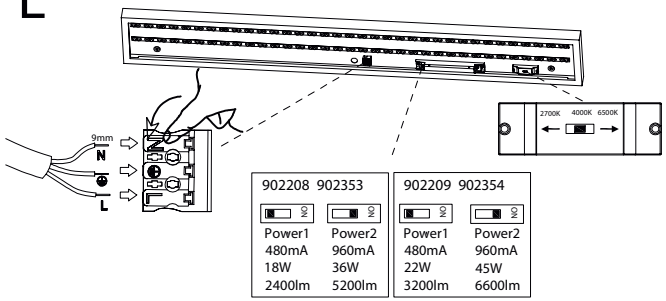

F

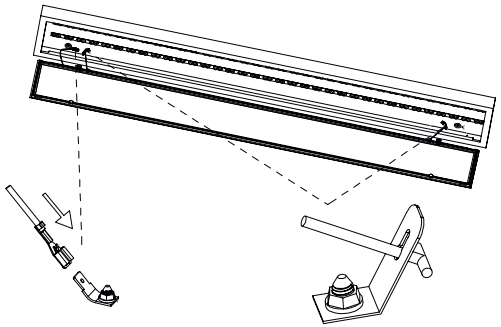

G

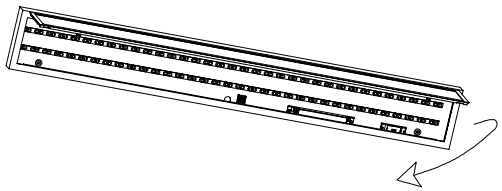

H

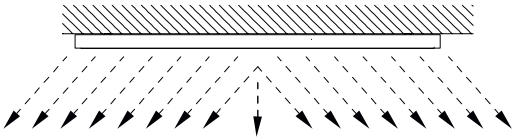

I

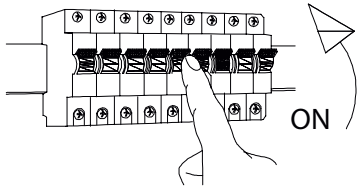

www.eglo.com

Here you can find gross
and net lumen + LDT data